User Manual

PMC005xx Series

Five-axis Stepping Motor Controller

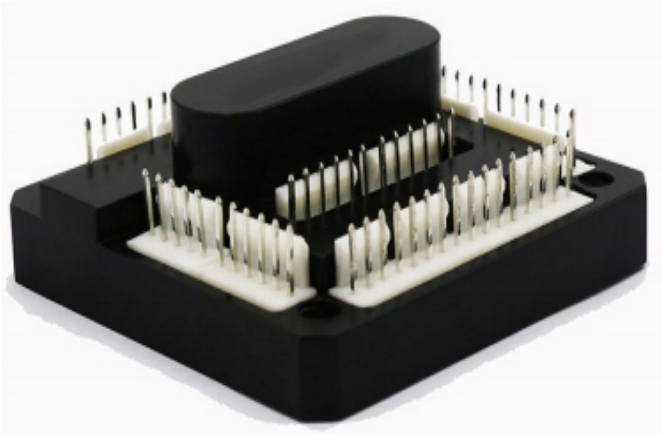

1. Version CONTROL

1） Update records

DATE	Author	Version	Remark
2017-6-25	yyj	V0.1.0	Initial
2017-7-19	hc	V0.1.1	Fix typo
2017-10-18	hc	V0.1.2	1、 Add instruction:p、j、J; 2、 Modify hardware interface J2;
2017-10-19	hc	V0.1.3	Add instruction:?4、$
2017-10-22	hc	V0.1.4	Modify parameter range
2017-10-31	hc	V0.1.5	Add instruction: ?aa、z、?2
2018-7-3	jiawei	V0.1.6	Modify LED status and pps range
2018-9-5	hc	V0.1.7	1、 Add startup speed(v) and stop speed(c) setting command. 2、 The “n” command adds the LED switch function. 3、 “V” command supports minimum speed to 1Hz.
2018-9-29	hc	V0.1.8	1、 Add B、C、E、W command 2、 Add baud rate command ‘b’ 3、 Add factory reset parameter function
2018-1-9	hc	V0.1.9	Adding aS instruction to support querying busy status of four motors at the same time
2019-3-29	hc	V0.1.10	1、 Add closed-loop support, add instructions aE, aC, au,?8. 2、 n instruction adds more modes to support closed-loop
2019-05-07	hc	V0.1.11	1、Add Global External Emergency Stop Function
2019-08-15	CY	V0.1.12	Supplementary note for command ?aa and ?a4
2019-09-19	hc	V0.1.13	1、Trigger mode setting instruction f for limits
2020-12-4	CY	V1.0.14	1、Add O(upper case) command
2021-10-9	yj	V1.0.15	1.Add some query commands

Catalog

1 Introduction

1.1 Statement of intellectual property right

PMC005XX series controller has been applied for the following national patent:

• Controller scheme and method have been applied for the protection of the invention patent.

• Controller circuit has been applied for the protection of utility model patent.

• Controller appearance has been applied for the protection of appearance patent protection.

PMC005XX series controller has embedded firmware code, it would be considered as a violation of intellectual property protection act and regulations that any behavior of trying to destroy the function of firmware code protection. If this behavior acquires the software or other achievements of intellectual property protection without authorization of CQPUSI, CQPUSI has the right to stop such behavior by filing a lawsuit according to the act.

1.2 Disclaimer

The using method of the device and other content in the description of this manual is only used to provide convenience for you, and may be update in future version. To ensure the application conforms to the technical specifications is the responsibility of your own. CQPUSI does not make any form of statement or guarantee to the information, which include but not limited to usage, quality, performance, merchantability or applicability of specific purpose. CQPUSI is not responsible for these information and the consequences result caused by such information. If the CQPUSI device is used for life support and/or life safety applications, all risks are borne by the buyer. The buyer agrees to protect the CQPUSI from legal liability and compensation for any injury, claim, lawsuit or loss caused by the application.

2 Overview

2.1 General Description

PMC005xx is a kind of micro five-axis stepping motor drive controller, which can be controlled by USB interface or RS485 network, and which has the characteristics of small volume, strong driving force, low calorific value and so on. PMC005xx stepping motor controller can provide parallel control of five-axis stepping motor. 0.1 ≤ 2.5A continuously adjustable peak current per axis, maximum 32 subdivision, built-in acceleration and deceleration, sensor control, and abnormal protection functions, especially suitable for compact multi-axis automation instruments and equipment.

。

2.2 Features

- ✓ Wide range of 9-36V single voltage supply
- ✓ Parallel control of maximum five-axis stepping motor, or two-axis DC brush control of four-axis stepping motor
- ✓ Output current per axis 0.1A ~ 2.5A, continuously adjustable
- ✓ Ladder acceleration and deceleration, instruction adjustable
- ✓ Support 0/2/4/8/16/32 microstepping resolution
- ✓ Support for 2 limit switches per axis
- ✓ Optional support for 2 solenoid valve controls (with automatic energy saving)
- ✓ Optional support for 2-axis DC brush motor control (with speed regulation function)
- ✓ With TSD, UVLO, OCP protection function
- ✓ Support 2-axis stepping motor closed-loop control (optional)
- ✓ Support for pre-stored procedures for offline or online execution

2.3 Production & Ordering Information

In order to serve you quicker and better, please provide the product number in following format when ordering PMC005XX:

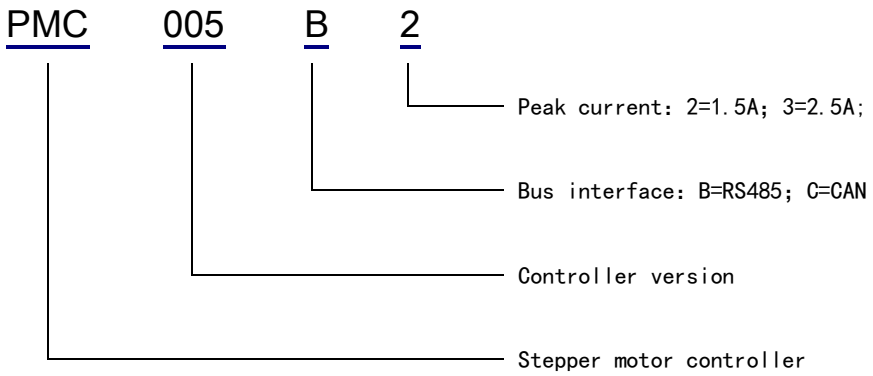

3 Connector Description

3.1 Terminal port location

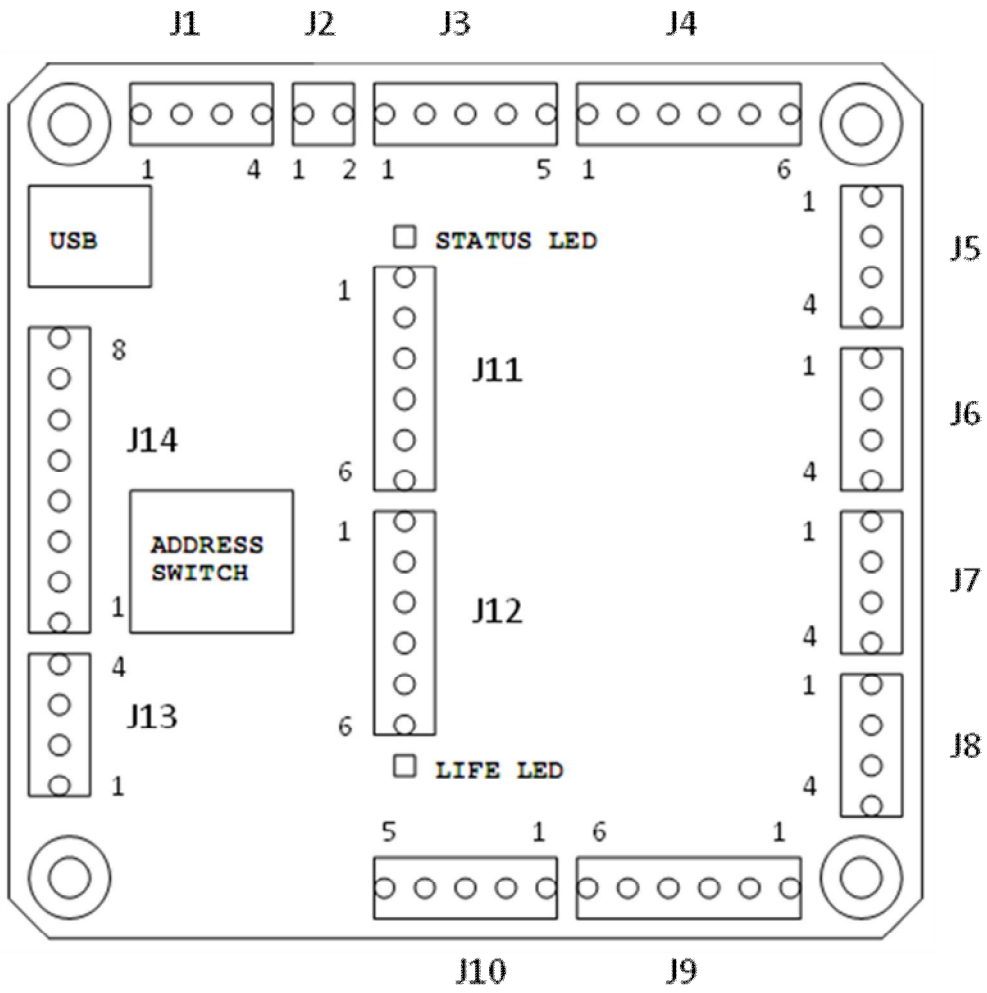

Figure 3-1

3.2 Signal Connection J1

Pin no	1	2	3	4
Designator	VCC	GND	485_B	485_A

Description

VCC: Supply voltage, 9 ≤ 36 V;

GND: Supply voltage ground;

485_A: RS485 signal A;

485_B: RS485 signal B;

3.3 Power connection J2

Pin no	1	2
Designator	VCC	GND

Description:

VCC: Supply voltage, 9 ~ 36 V;

GND: Supply voltage ground;

3.4 Encoder signal interface J3

Pin no	1	2	3	4	5
Designator	GND	ENC_Z	ENC_A	+5V	ENC_B

Description:

GND: encoder source;

+5V: encoder power supply 5V;

ENC_Z: encoder Z phase (retained);

ENC_A: Phase A of encoder;

ENC_B: Phase B of encoder;

3.5 Motor limit interface J4

Pin no	1	2	3	4	5	6
Designator	+5V	UP_LIM	GND	+5V	LOW_LIM	GND

Description:

GND: limit sensor ground;

+5V: limit sensor power supply 5V (200ohm current limiting resistance connected internally);

UP_LIM: upper limit sensor input;

LOW_LIM: lower limit sensor input;

Note: the maximum output current of all 5V power supplies is limited to 250Ma.

3.6 Motor interface J5

Pin no	1	2	3	4
Designator	A+	A-	B+	B-

Description:

A+: motor phase A;

A-: motor phase A-;

B+: motor phase B;

B-: motor phase B-;

3.7 Motor interface J6

Pin no	1	2	3	4
Designator	A+	A-	B+	B-

Description:

A+: motor phase A;

A-: motor phase A-;

B+: motor phase B;

B-: motor phase B-;

3.8 Motor interface J7

Pin no	1	2	3	4
Designator	A+	A-	B+	B-

Description:

A+: motor phase A;

A-: motor phase A-;

B+: motor phase B;

B-: motor phase B-;

3.9 Motor interface J8

Pin no	1	2	3	4
Designator	A+	A-	B+	B-

Description:

A+: motor phase A;

A-: motor phase A-;

B+: motor phase B;

B-: motor phase B-;

3.10 Motor limit interface J9

Pin no	1	2	3	4	5	6
Designator	+5V	UP_LIM	GND	+5V	LOW_LIM	GND

Description:

GND: limit sensor source;

+5V: limit sensor power supply 5V (200ohm current limiting resistance connected internally);

UP_LIM: upper limit sensor input;

LOW_LIM: lower limit sensor input;

Note: the maximum output current of all 5V power supplies is limited to 250mA.

3.11 Encoder signal interface J10

Pin no	1	2	3	4	5
Designator	GND	ENC_Z	ENC_A	+5V	ENC_B

Description

GND: encoder source;

+5V: encoder power supply 5V;

ENC_Z: encoder Z phase (retained);

ENC_A: Phase A of encoder;

ENC_B: Phase B of encoder;

3.12 Motor limit interface J11

Pin no	1	2	3	4	5	6
Designator	+5V	UP_LIM	GND	+5V	LOW_LIM	GND

Description:

GND: limit sensor source;

+5V: limit sensor power supply 5V (200ohm current limiting resistance connected internally);

UP_LIM: upper limit sensor input;

LOW_LIM: lower limit sensor input;

3.13 Motor limit interface J12

Pin no	1	2	3	4	5	6
Designator	+5V	UP_LIM	GND	+5V	LOW_LIM	GND

Description:

GND: limit sensor source;

+5V: limit sensor power supply 5V (200ohm current limiting resistance connected internally);

UP_LIM: upper limit sensor input;

LOW_LIM: lower limit sensor input;

3.14 Solenoid valve interface J13

Pin no	1	2	3	4
Designator	DRV1-	DRV1+	DRV2-	DRV2+

Description:

DRV1+: solenoid valve (or DC brush 1, or stepping motor A);

DRV1-: solenoid valve-(or DC brush 1, or stepping motor A -);

DRV2+: solenoid valve (or DC brush 2, or stepping motor B);

DRV2+: solenoid valve (or DC brush 2, or stepping motor B);

3.15 Digital IO interface J14

Pin no	1	2	3	4	5	6	7	8
Designator	BOOTRES	FSET	TMSRES	UART_RX	UART_TX	GPIO	ADC1	ADC2

Description:

BOOTRES: factory retains pin 1;

FSET: Factory reset input;

TMSRES: Reserved, should be keep floating;

UART_TX: UART TX signal;

UART_RX: UART RX signal;

GPIO: universal IO pin;

ADC1: analog input 1, input voltage range 0 ~ 3.3 V, 10 bit accuracy;

ADC2: analog input 2, input voltage range 0 ~ 3.3 V, 10 bit accuracy;

3.16 USB connection interface

PMC005xx supports MICRO USB connection. When connected to the computer through USB cable, the system enumerates the serial port device, which can be used as the RS485 HOST terminal to control one or more PMC005xx.

3.17 Address selector

Each PMC005xx has a unique RS485 address that can be selected by the on-board 16-bit rotating coding switch. Note that the address selection will only take effect before the system is powered on.

3.18 Pilot Lamp

The PMC005xx has two LED indicators. The STATUS and LIFE indicators are respectively, and when the controller receives the upper computer command, the STATUS indicator light is on; when the controller is working normally, the LIFE indicator light flashes. (The two lights are turned off by default and the software can be turned on).

4 Interface Connection

4.1 RS485 network connection

The network scheme composed of multiple (up to 16) PMC005xx controllers can be connected by RS485 bus, and the maximum communication distance can reach 1200 meters. A twisted pair is used to connect all nodes. When the distance is more than 50 meters, each end of the network needs to be connected with a 120 ohms terminal resistance to prevent signal reflection and overshoot. At the same time, the RS485 on the host side needs to be shared with the controller of each node.

The PMC005xx controller can choose the four baud rate settings of 9600 ~ 19200 ~ 38400 ~ 57600. All the controllers in the same network must adopt the same baud rate. Because RS485 can only support half-duplex networking, there can only be one RS485 host in the network.

Note: the upper and lower limits of the signal threshold defined by the RS-485 standard are ±200mV. That is, when A -B > 200mV, the bus state should be represented as "1", and when A - B <-200mV, the bus state should be represented as "0". However, when A - B is between ±200mV, the bus state is uncertain, so in the actual networking, it is suggested that the user should set up a pull-down resistance on the A and B lines in order to avoid this uncertain state as far as possible.

4.2 Limit sensor connection

PMC005xx can support the input of two limit switches per axis. The limit switches can be ordinary opposite optical coupling, micro reflective optical coupling, optical coupling with Schmitt shaping pair, or photoelectric proximity switch. When using the ordinary pair photocoupling as the limit input, the reference connection diagram is as follows.

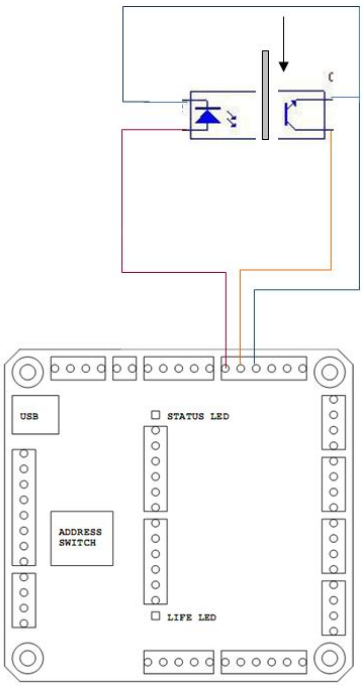

Figure 4-1

In order to improve the limit accuracy, it is necessary to limit the output slew rate of optical coupling to an acceptable range. It is recommended to use optical coupling with Schmitt shaping, such as OPB99 series.

4.3 Step motor connection

PMC005xx has four stepping motor interfaces, J5, J6, J7 and J8, which can connect four two-phase stepping motors with a maximum driving current of 2.5A. When the motor on one of the interfaces has faults such as undervoltage, short circuit and so on, the controller automatically closes the output of the interface and sets the corresponding state mark bit.

When the motor on the four interfaces works at the same time, the maximum pulse rate supported by the controller is 32 Kpps per axis, and when a single interface works alone, the maximum pulse rate supported by the controller is 64 kpps.

4.4 Solenoid valve connection

PMC005xx provides two sets of solenoid valve connections, or two groups of brushed DC motor connections, or a stepping motor connection, the maximum driving current of the interface 2.5A, built-in reverse EMF protection diode circuit

When the solenoid valve is connected, the automatic energy saving and cooling control of the solenoid coil is supported (optional software function).

When the brush DC motor is connected, the motor can be controlled by forward and backward rotation and speed regulation (optional software function).。

When the two-phase stepping motor is connected, the ultra-low vibration and mute software algorithm is used to realize the low speed noise-free control of the stepping motor (optional software function).

Note: do not connect the sum of the drive interface directly to the power supply or to the ground.

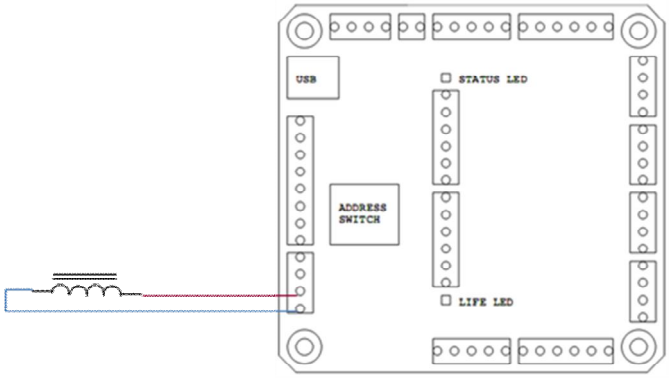

Figure 4-2

4.5 Digital IO interface connection

The PMC005xx controller has 8 digital IO interfaces, which are currently reserved.

4.6 Encoder interface

PMC005xx supports the closed-loop control of two-axis stepping motor, which can be controlled by incremental photoelectric rotary encoder or straight-line grating ruler. The resolution 200~1600cpr. PMC005xx closed-loop control adopts digital PID algorithm to realize three loop control of current, position and speed.

5 Command set

The PMC005xx controller uses a string-based DT communication protocol, which consists of a Alpha character that represents the command and a number that then represents the parameter value. When the controller receives the command, it returns a response packet, and the format of the command response package is described in 5.1.

5.1 Command response structure

5.1.1 Command structure

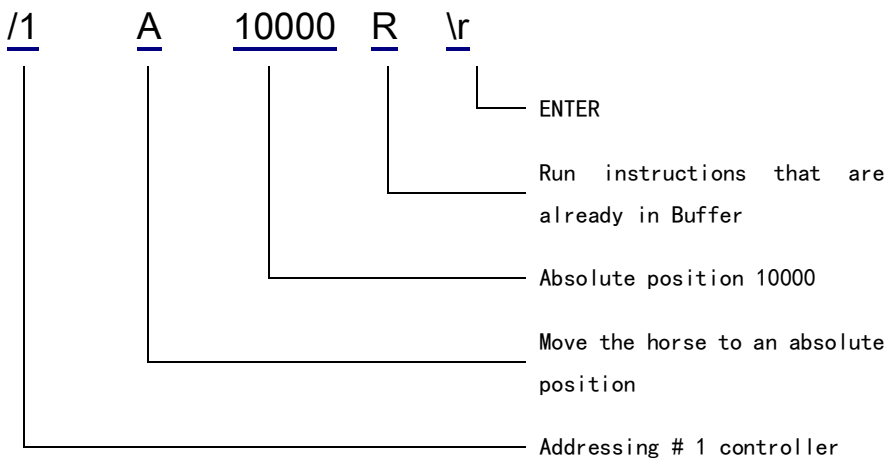

Figure5-1

Multiple commands can form a string that can be sent to the controller at once, which can loop a complex command. The command Buffer to write to the controller in

one transfe

5.1.2 Response package structure

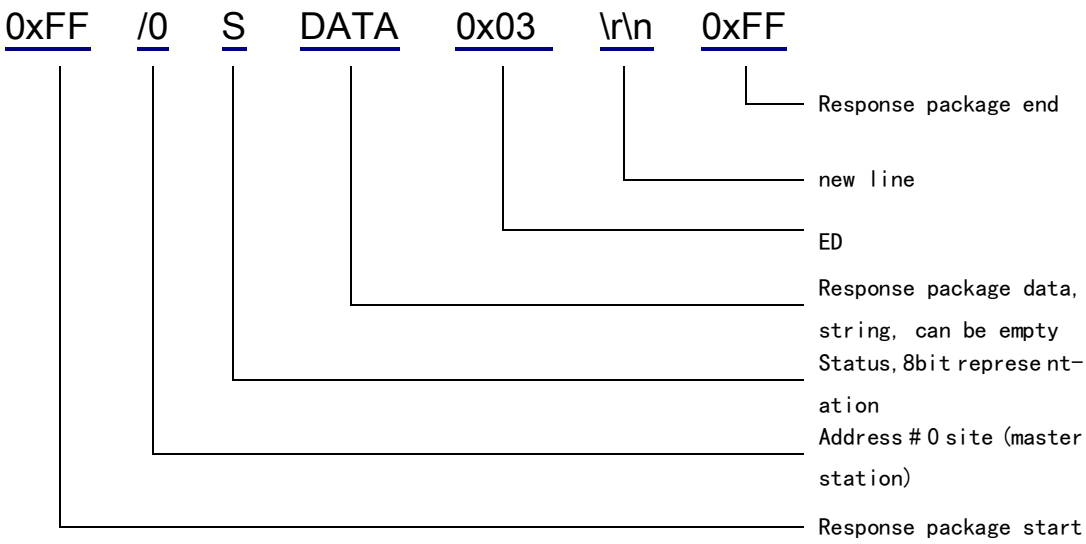

The 8 bits of the state in the response package are defined as follows:

Bit7: reservation

Bit6: reservation

Bit5: preparation bit, which is 1 indicating that it is ready to receive a new command

Bit4: reservation

Bit3-0: error code

Error code	Code description
0	No error
1	Initialization error
2	Error command
3	Error operands
5	Communication error
7	Uninitiated
9	Overload error
15	Command overflow (command string length exceeds 256)

E.g. Send instruction:/1?0\r(hex: 2F 31 3F 30 0D),

Controller response (hexadecimal): FF 2F 30 40 32 33 33 33 03 0D 0A FF, response status 0x40, indicating that the controller is ready to receive a new command. 32 33 34 35 33 30 indicates that the position of the currently selected motor is 234530.

NOTE:1. When an instruction is sent, a enter key is added (ASCII code is 0 D, the string is represented as \r)

2. The above instruction response message is analyzed miniUSB communication, and the controller response is FF 2F 30 when using RS485 communication 40 32 33 34 35 33 30 03 0D, 0D is the end of the message.

5.2 Supported commands

The commands supported by PMC005xx are listed below(The value in brackets in the sequence of operations is the default value).

Command	Operand	Description
A	(-2^31)-(2^31-1)	Move motor to an absolute position, E.g./1A10000R
B	(-2^31)-(2^31-1)	The motor moves to an absolute position, and when the instruction is executed, the motor returns immediately after starting, and does not wait for the motor to rotate. E.g./1B10000R
P (upper case)	(-2^31)-(2^31-1)	Move motor relative in positive direction. A value of zero will cause an endless forward move at speed V. E.g./1P10000R
C (upper case)	(-2^31)-(2^31-1)	Turn the horse in the positive direction to reach the relative position, write a value of 0 to enter the forward speed mode, and return immediately after the motor starts when the instruction is executed, and will not wait for the motor to rotate. E.g./1C10000R
D	(-2^31)-(2^31-1)	Move motor relative in negative direction. A value of zero will cause an endless forward move at speed V. E.g./1D10000R
E	(-2^31)-(2^31-1)	Turn the horse in the opposite direction, write a value of 0 to enter the reverse speed mode, and return immediately after the motor starts when the instruction is executed, and will not wait for the motor to rotate. E.g./1E10000R
W	1 – 4	Waiting for a motor to turn.E.g./1W1R
Z (upper case)	0-(2^31-1) (400)	Home/initialize motor When issued, motor will turn toward 0 until the home sensor is interrupted. If already interrupted, motor will back out from interrupted position and come back in until re-interrupted. This sets motor position to zero. E.g./1Z300000R
V (upper case)	1-64000 (16000)	Set max/slew speed (velocity) of default or selected motor. (positioning mode) 。Units are pps when it at open-loop,Units are cps when it at closed-loop, E.g./1V32000R
L	0-65000 (100)	Set acceleration factor. Acceleration factor = L* (V in microsteps / sec^2) = (L value) x (100,000,000/65536). E.g./1L1R it will require 16.384 seconds to reach final velocity 100000pps.
g		Beginning of loop marker.

		E.g./1gP10000M1000G10R
G	0-30000	End of loop marker and repeat designator. A value of 0 causes the loop to repeat until terminated. E.g./1gP10000M1000G10R NOTE: Loops can be nested up to 4 levels.
s (lower case)	0-15	Stores a program to specified EEPROM.Program 0 is executed on power-up. E.g./1s1A10000A0R
e	0-15	Executes program stored in specified EEPROM location 0-15. E.g./1e1R executes stored program 1 (the program stored in EEPROM location 1).
R		Instructions running in the command Buffer. E.g./1R
m	0-125 (25)	Set max move current within a scale of 0 to 125% of max current. 100% = 2A E.g./1m125R the hold current is set to 2.5A
h	0-62 (10)	Sets hold current within a scale of 0 to 50% of max current. 100% = 2A E.g./1h62R the hold current is set to 1.24A
M	0-(2^30)	The program waits for M milliseconds
aM	1 – 5	Designate target axis for command. From then on, all commands are sent to this Axis. E.g./1aM1R
T		Terminate the current command or loop. E.g./1T
Q		Query the current status of the controller, return data containing the starting character and host address / 0, followed by five bit status bytes, bit5 as idle indicator bit, bit3~0 for error code: 0：no error; 1：Initialization error 2：Bad Command 3：Operand out of range
&		Reports the current firmware revision number and date.
?aa		Read two analog input values. Return value order is −1, GLIM, ADC2, ADC1. GLIM represents the global limit state, the value of high level is 16384, and the value of low level is 0.
?aa	1-4	Reports analog value of limit/home inputs on designated axis. E.g./1?aa1reads back Axis 1 Limits.
?0 (?zero)		Reports the current commanded position for last commanded axis.
?2		Reports the current Slew/Max speed for Position for default or selected motor.
?4		Digital Input Query. Reports the high/low status of all four Digital/Analog IO inputs .

		Bit0:J14 Pin6 Bit1:J14 Pin5 Bit2:J14 Pin4 Bit3-15:Reservation Bit16:Channel 1 upper limit Bit17:Channel 1 lower limit Bit18:Channel 2 upper limit Bit19:Channel 2 lower limit Bit20:Channel 3 upper limit Bit21:Channel 3 lower limit Bit22:Channel 4 upper limit Bit23:Channel 4 lower limit Bit24:Global limit Bit25-31:Reservation
$		Reports the command string currently executing
n		Bit0:LED switch, 0:turn LED off,1:turn LED on. Bit1:enable limits, 0:turn limit off,1turn limit on; Bit2:Not used Bit3:enables Encoder Position Correction mode, with the two encoder (AB) inputs being used for feedback. Axes 1 and 2 only. Bit4:Enables Encoder Overload Report mode. Axes 1 and 2 only. Bit5-8:Not used Bit9-10:These bits will execute one of the stored recovery script programs 13, 14 or 15 whenever the position correction feedback shuts down the drive due to an overload. (That is, the number of retries specified by the au command has been exhausted. See Position Correction Commands in this table.) Axes 1 and 2 only. Position Correction must run concurrently.
p (lower case)	0-65000	Ping Command Sends a numeric message back to the host E.g./1aM2gA1000p3333A0G0R
j	0,2,4,8,16,32 (16)	Set microsteps
J	0−3	Turn driver On/Off 0：Both driver off; 1：driver 1 on,driver 2 off; 2：driver 1 off,driver 2 on ; 3：Both driver 0n; E.g./1J3R(both driver on)
z (lower case)	(-2^31)-(2^31-1)	sets zero point to current motor position. E.g., /1aM2z0R sets zero point to current motor position. Absolute positions are computed in reference to this point.

v (lower case)	0–900 （0）	Set start velocity for selected motor. Units are pps when it at open-loop,Units are cps when it at closed-loop,E.g./1v500R
c (lower case)	0-900 (0)	Set stop velocity for selected motor. Units are pps when it at open-loop,Units are cps when it at closed-loop, E.g./1c500R
b	9600-115200 (9600)	Set bound rate, E.g./1b38400R
?aS		Reports busy status of all four motors. the corresponding position in the return value represents the state of each motor. bit0:the busy status of Axis 1 Bit1:the busy status of Axis 2 Bit2:the busy status of Axis 3 Bit3:the busy status of Axis 4 E.g.:send string /1?aS, read back:2,It indicates that the second motor is busy.
?aA		Reports positions of all four motors
?aV		Reports programmed velocities of all four motors
aC	1-64999 (50)	Set position correction value (deadband). When in position correction mode, position correction is performed if the error exceeds this value. E.g./1aM2aC100R,The allowable position error of instruction shaft 2 is 50
aE	1-10^6 (1000)	Set encoder ratio,This sets the ratio between the encoder counts/rev and the microsteps/rev for the specified motor E. g. /1aM2aE12500R（Axis 2 specified） Encoder ratio = (motor microsteps per rev/quadrature encoder counts per rev) X 1000.
au	1-64999 (10)	Set overload timeout. This sets the number of times the move is retried in case a move stalls. E. g. /1aM2au10000R（Axis 2 specified) When the au retries are exhausted, the drive will drop out of position correction mode (n8) and report Error 9 (overload).
f	0-3	Set the mode of the external emergency stop input signal of the current selected motor, the value range is 0-3, indicating the following meanings: 0：rising edge triggered, internal pull up 1：rising edge triggered, internal pull-down 2：falling edge triggered, internal pull up 3：falling edge triggered, internal pull-down
O (upper case)	0-1	Enable motor of specified axis , 0: motor doesn't enable 1::motor enabled E.g: /1aM1O0R，the motor of axis 1 doesn't enabled；

?8		Reports encoder position for currently selected motor. E.g., /1aM1R /1?8 (Motor/encoder 1 specified) /1aM2R /1?8 (Motor/encoder 2 specified) Example response: 1000

5.2.1 Some query commands

?aa: read ADC0,ADC1;
?aS: read motor status;
?0: read motor position;
?aA: read 4 motors position;
?aV: read 4 motors velocity;
?1: read start speed;
?2: read max speed;
?3: read end speed;
?4: read io value;
?5: read idle current;
?6: read work current;
?7: read actual current;
?a8: read encoder position;
?aE: read encoder setting;
?aC: read deadband;

Use '!' to achieve discharge save e.g: /1!

5.3 Encoder position correction mode

1、Motor direction confirmation

Use /1aM1P20000R to turn the motor forward, use the /1?8 command to view the encoder count when the rotation is complete, and if the encoder count does not increase positively, the encoder needs to exchange AB lines. Or switch the one-phase line sequence of the stepping motor so that the encoder count direction is consistent with the motor direction.

2、Encoder ratio calculation

Encoder ratio = 1000 * number of microstep per revolve/(encoder line number * 4), take 1000 line encoder, controller default setting microstep 16 as an example, should set the encoder line number to:1000*(200*16)/(1000*4) = 800.

3、Set correction mode parameters

The aC instruction sets the position correction allowed position error, and the au instruction sets the position correction retry number.

4、Start encoder correction mode

E.g. /1aM1V20000aE800aC1000au100n8R, Axis 1 will start the position correction mode

5、Start automatic recovery encoder correction mode

E.g. /1aM1V20000aE800aC1000au100n520R, Axis 1 will start the position correction mode, block it and run out of retries, and the script instruction for position 13 will be executed

6 Electrical characteristics and technical specifications

Parameter	Condition	Min	Typical	Max	Unit
Supply Power Voltage	Normal 25℃	9	24	36	V
Operation Temperature	12V DC	0		55	℃
IO maximum current	source/sink current	0		20	mA
Output current per axis	Normal 25℃	0		2.5	A
Solenoid Output current	Normal 25℃	0		250	mA

7 Dimensions